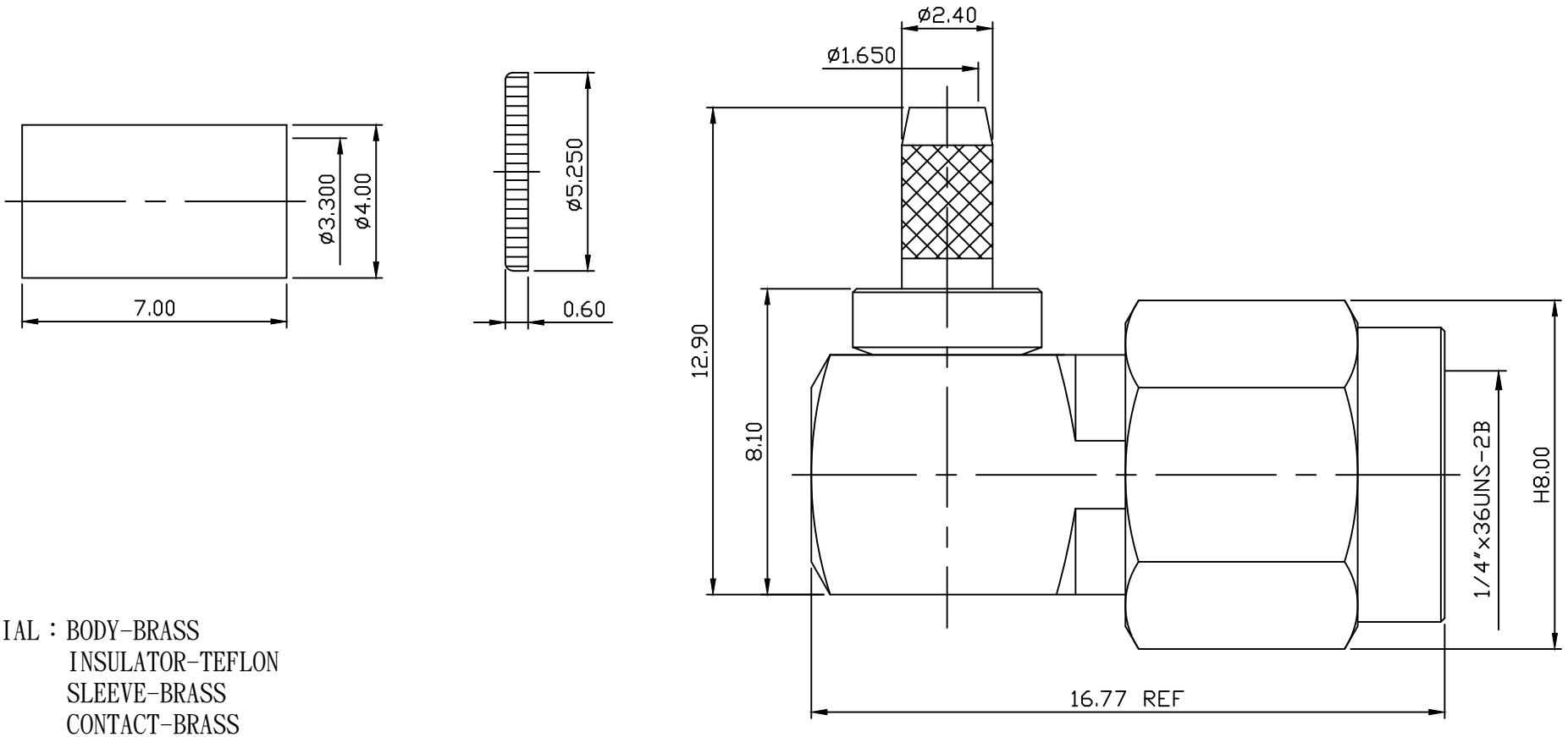

MATERIAL：BODY-BRASS
INSULATOR-TEFLON
SLEEVE-BRASS
CONTACT-BRASS
C WASHER-BRASS
SI RUBBER-SILICONE
CAP-BRASS
SHELL-BRASS
RING-BRASS

FINISH：BODY-GOLD PLATING OVER NICKEL
SLEEVE-GOLD PLATING OVER NICKEL
CAP-GOLD PLATING OVER NICKEL
SHELL-GOLD PLATING OVER NICKEL
RING-GOLD PLATING OVER NICKEL
CONTACT-GOLD PLATING OVER NICKEL

DIMENSIONS ARE IN MILLIMETERS TOLERANCE			C&C ELECTRONICS CONNECTORS INC
·× ±0.5 ·×× ±0.1 ·××× ±0.05	ANGLE ±3°	SCALE 6:1 REV A-1	TITLE R/A SMA MALE CRIMP FOR RG316 DOUBLE SHIELD
DRAWN 潘曉臨	DATE 98.03.16		DRAWING NO 806-110205
APPROVAL	DATE		FILE NO 806-0582