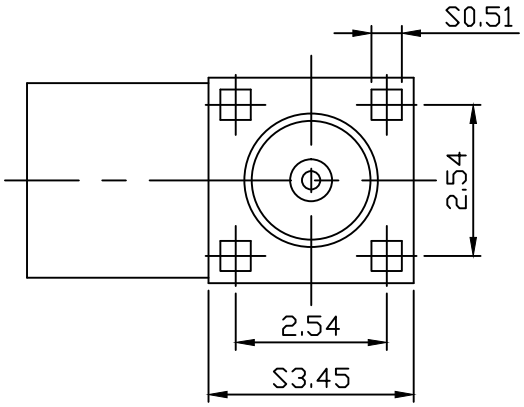

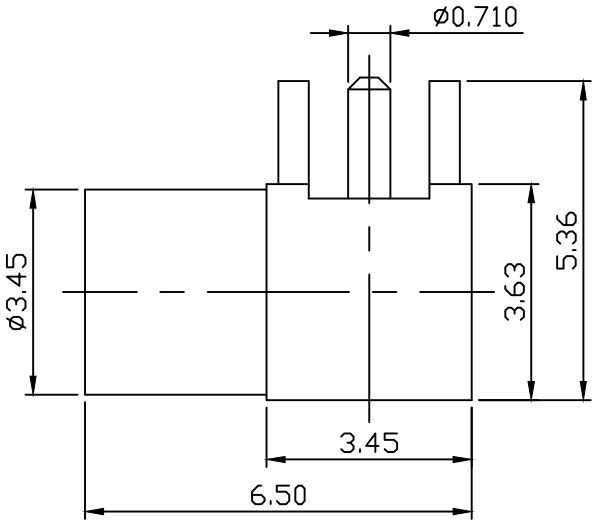

MATERIAL：BODY-BRASS
CONTACT-BERYLLIUM COPPER
INSULATOR-TEFLON
INSULATOR-TEFLON
FINISH：BODY-GOLD PLATING OVER NICKEL
CONTACT-GOLD PLATING OVER NICKEL

DIMENSIONS AREOIN MILLIMETERS TOLERANCE			C&C ELECTRONICS CONNECTORS INC
·× ±0.5 ·×× ±0.1 ·××× ±0.05	ANGLE ±3°	SCALE 8:1 REV A-0	TITLE MMCX FEMALE CONNECTOR
DRAWN 郭姿良	DATE 91.02.19		DRAWING NO 800-5207
APPROVAL	DATE		FILE NO 800-0039